THE HYDRAULIC

Elbow 90 JIC37 Male x Metric Male Locknut

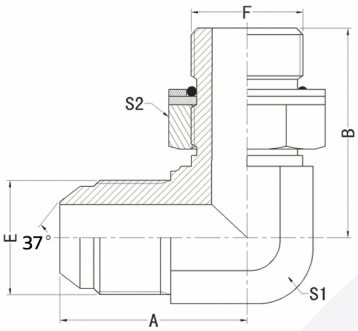

JM - KMO 90

Part No.	Thread		Dimension (mm)			
	E	F	A	B	S1	S2
	JIC37	Metric				
JM04-KMO10 90	7/16"-20	M10x1.0	24.5	27.5	11	14
JM04-KMO12 90	7/16"-20	M12x1.5	24.5	30.3	11	17
JM04-KMO14 90	7/16"-20	M14x1.5	26.6	32	14	19
JM05-KMO10 90	1/2"-20	M10x1.0	26.5	28.5	14	14
JM05-KMO12 90	1/2"-20	M12x1.5	26.5	32	14	17
JM05-KMO14 90	1/2"-20	M14x1.5	26.5	32	14	19
JM06-KMO14 90	9/16"-18	M14x1.5	26.9	32	14	19
JM06-KMO16 90	9/16"-18	M16x1.5	28	34.8	16	22
JM06-KMO18 90	9/16"-18	M18x1.5	30	37	19	24
JM08-KMO16 90	3/4"-16	M16x1.5	32	38	19	22
JM08-KMO18 90	3/4"-16	M18x1.5	33	38	19	24
JM08-KMO22 90	3/4"-16	M22x1.5	34.8	40.2	22	27
JM10-KMO16 90	7/8"-14	M16x1.5	38	38	22	22
JM10-KMO18 90	7/8"-14	M18x1.5	38	39.5	22	24
JM10-KMO22 90	7/8"-14	M22x1.5	38	42.5	22	27
JM12-KMO22 90	1-1/16"-12	M22x1.5	45	44	27	27
JM12-KMO27 90	1-1/16"-12	M27x2.0	44.2	48.5	27	32
JM16-KMO27 90	1-5/16"-12	M27x2.0	49	52	33	32
JM16-KMO33 90	1-5/16"-12	M33x2.0	49	52.5	33	41
JM20-KMO42 90	1-5/8"-12	M42x2.0	55.5	57.2	41	50
JM24-KMO48 90	1-7/8"-12	M48x2.0	62.5	62.5	48	55